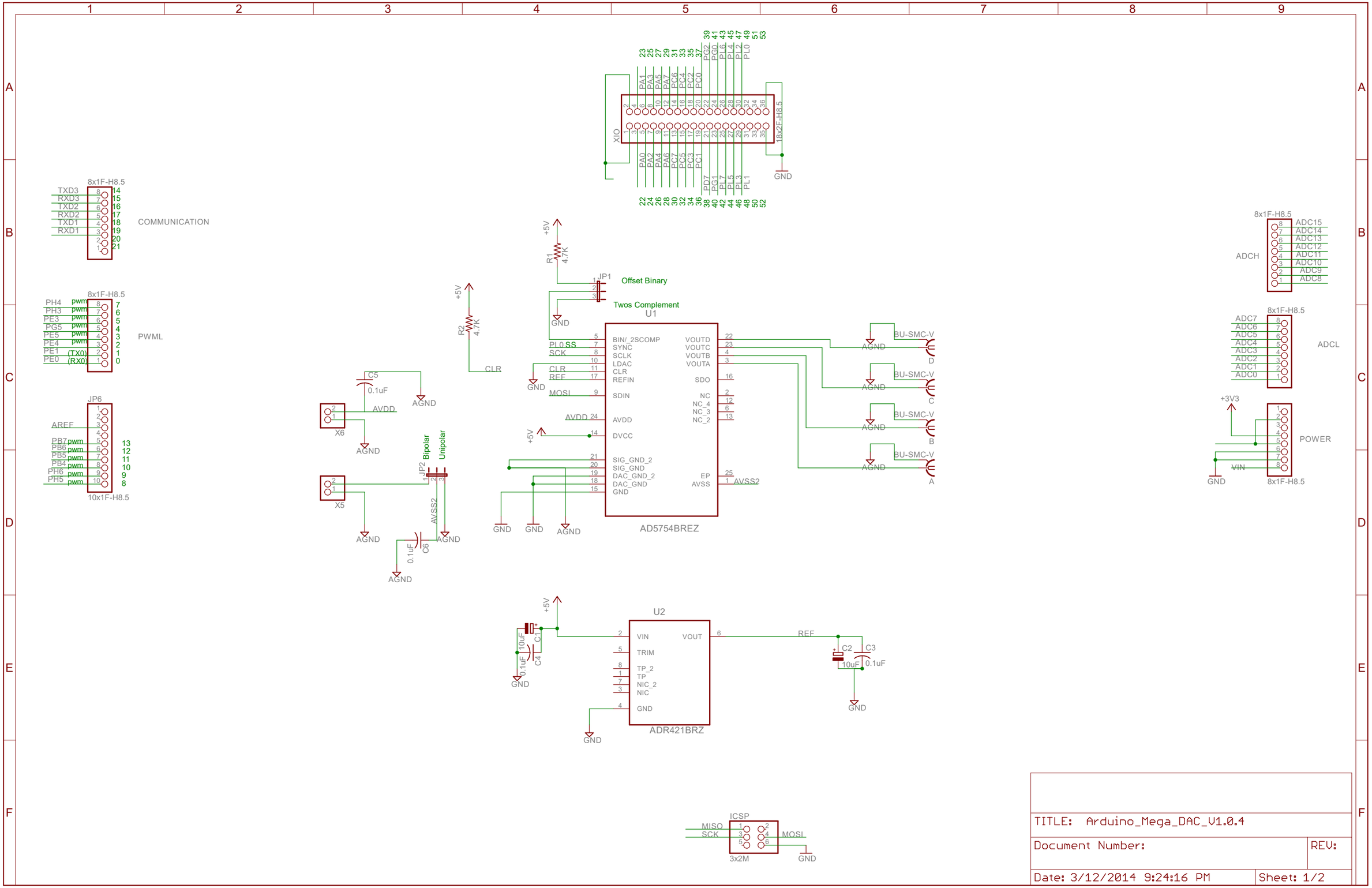

TITLE: Arduino_Mega_DAC_V1.0.4	
Document Number:	REV:
Date: 3/12/2014 9:24:16 PM	Sheet: 1/2

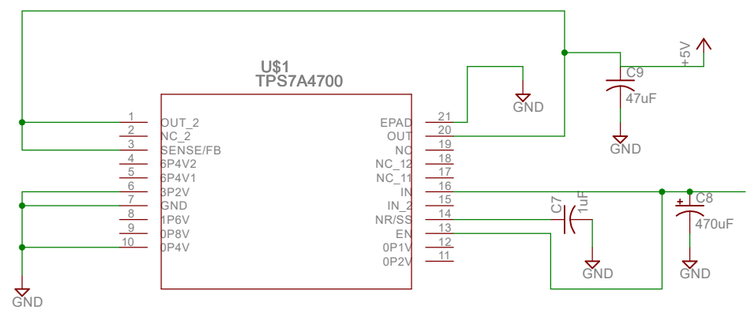

TITLE: Arduino_Mega_DAC_V1.0.4

Document Number:

REV:

Date: 3/12/2014 9:24:16 PM

Sheet: 2/2